إشراق للطاقة الشمسية
ESHRAQ SOLAR

Post

Product Name	Post
Dimensions	W50xH50mm
Weight	1.208 KG/m
Material	AL6005-T5
Surface Finish	Anodized(10/15 micron)
Standard	AS/NZS 1170.2/CE/UL

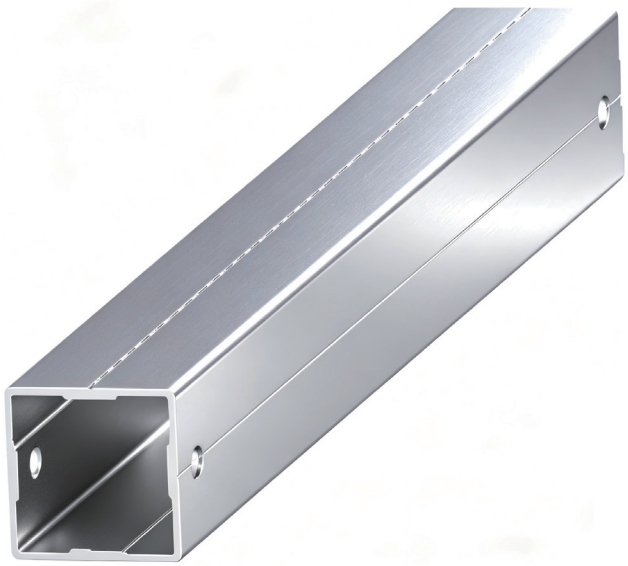

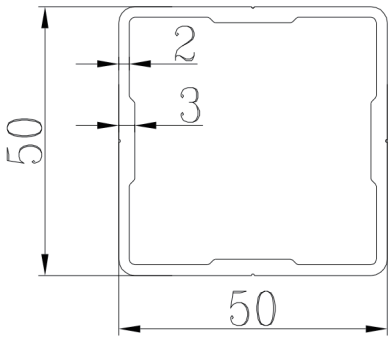

Rail Clamp

Product Name	Rail Clamp
Application	For PV module Rail（with Eshraq Rail）
Dimensions	L 60 xW 35 mm
Weight	0.074 kg/pc
Material	AL6005-T5
Surface Finish	Anodized (10/15micron)，Screw:SUS304
Standard	AS/NZS 1170.2/CE/UL

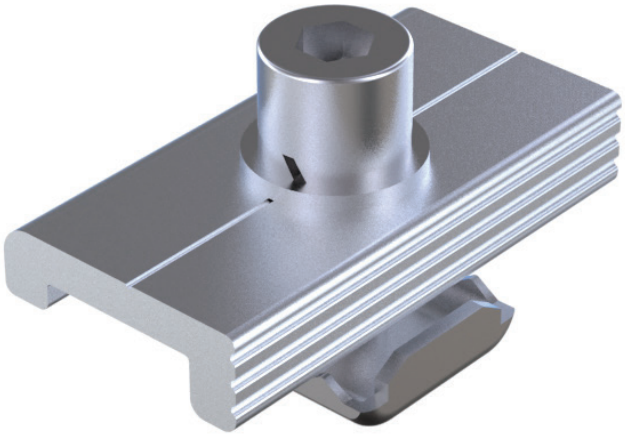

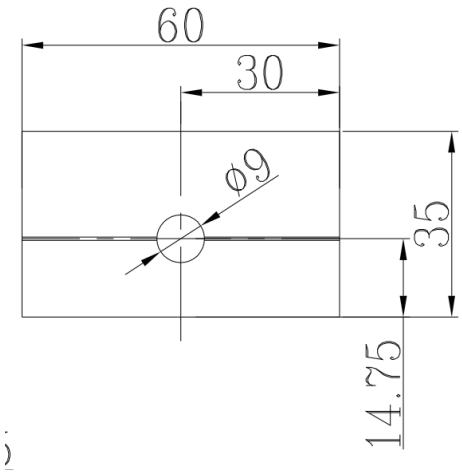

Component List (Qty./Set)			
M8*30 hexagon socket bolt	1	T Nut	1
M8 spring washer	1	M8 spring lock washer	1
Rail clamp	1		

إشراق للطاقة الشمسية
ESHRAQ SOLAR

Base

Product Name	Base
Dimensions	L162 xW 95 mm
Weight	0.865 kg/pc
Material	AL6005-T5
Surface Finish	Anodized (10/15micron), Screw:SUS304
Standard	AS/NZS 1170.2/CE/UL

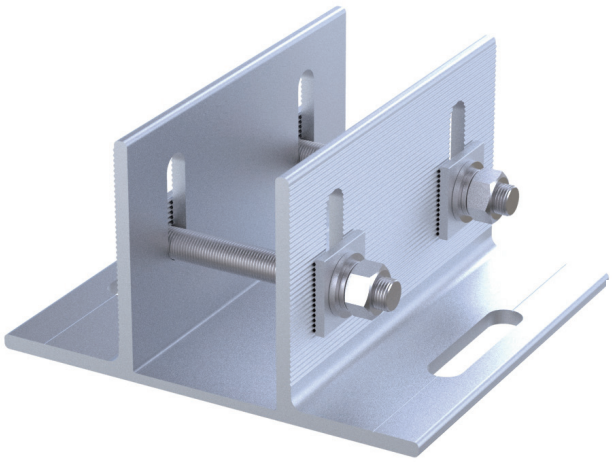

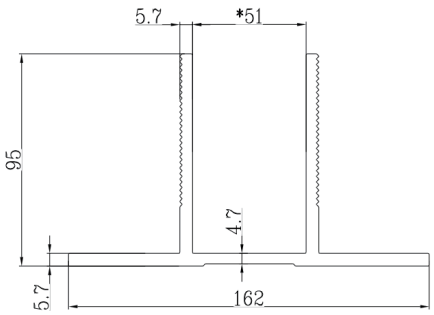

Component List (Qty./Set)			
Base	1	M10*90 hex head bol	2
Base positioning block	4	M10 spring washer	2
M10 Bolt	2		

إشراق للطاقة الشمسية
ESHRAQ SOLAR

H Component

Product Name	Small H Component
Application	For connects the main beam and the column
Dimensions	L 60 xW 85 mm
Weight	0.313 kg/pc
Material	AL6005-T5
Surface Finish	Anodized (10/15micron), Screw:SUS304
Standard	AS/NZS 1170.2/CE/UL



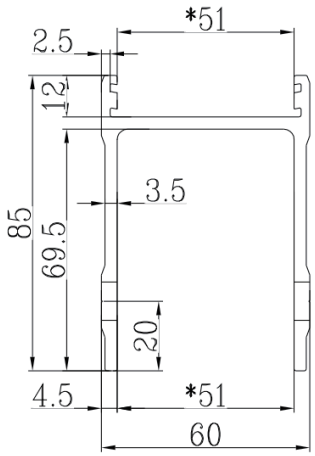

Component List (Qty./Set)			
M10*20 hex head bolt	2	M10 Spring washer	3
M10 flat washer	4	H component	1
M10*80 hex head bolt	1	M10 nut	1
H-clamp	1		

إشراق للطاقة الشمسية
ESHRAQ SOLAR

H Component

Product Name	Big H Component
Application	For connects the main beam and the column
Dimensions	L 60 xW 85 mm
Weight	0.473 kg/pc
Material	AL6005-T5
Surface Finish	Anodized (10/15micron), Screw:SUS304
Standard	AS/NZS 1170.2/CE/UL

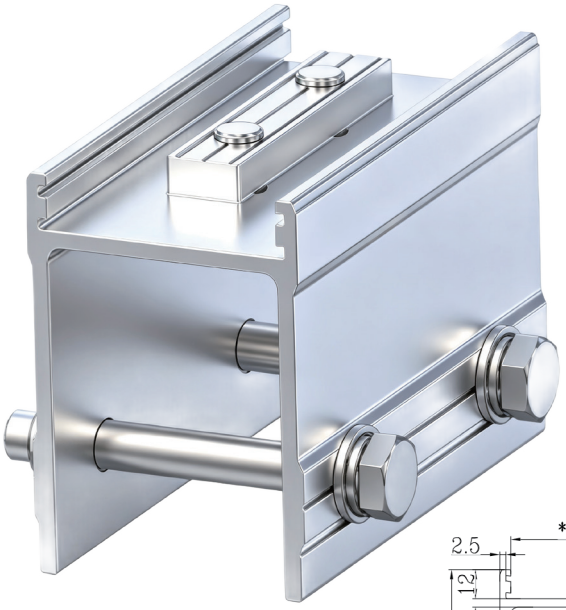

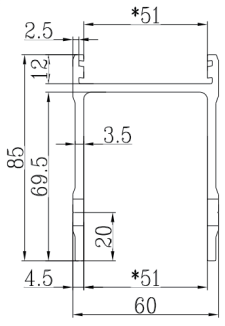

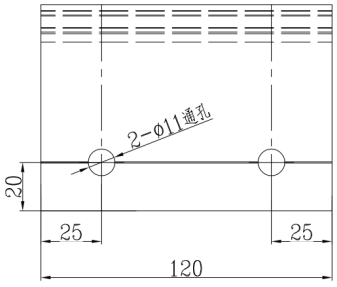

Component List (Qty./Set)			
M10*20 hex head bolt	2	M10 Spring washer	4
M10 flat washer	6	H component	1
M10*80 hex head bolt	2	M10 nut	2
H-clamp	2		

إشراق للطاقة الشمسية
ESHRAQ SOLAR

End Clamp

Product Name	30mm End Clamp
Item Number	GM-STXM-EC-30-D
Application	For PV module of 30mm thickness
Dimensions	L 47 xW 33.5 mm
Weight	0.083 kg/pc
Material	Main Structure: AL6005-T5 Bolts: SUS 304
Colar	Silver
Surface Finish	Anodized （Anodized (no less than 10 um, excluding machined surfaces)
Standard	AS/NZS 1170.2/CE/UL

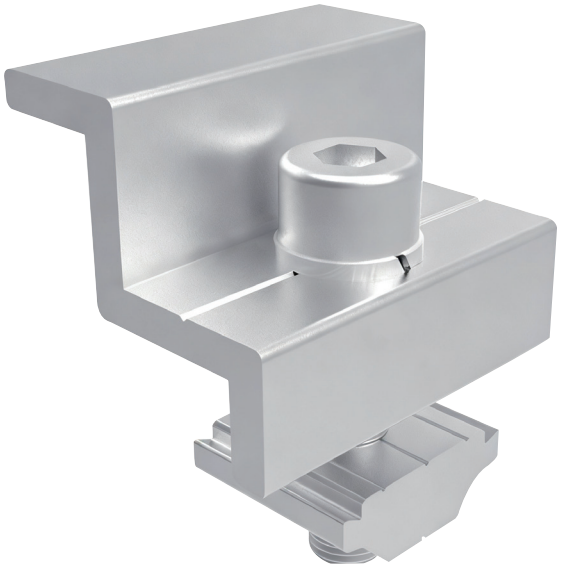

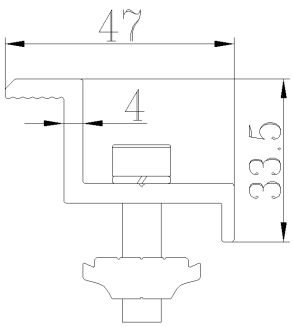

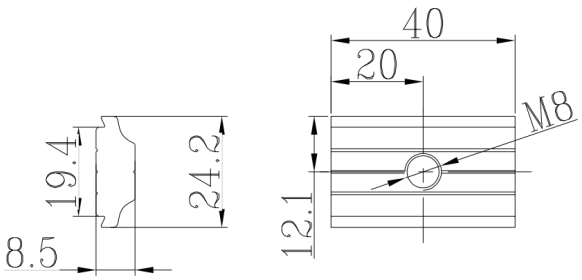

Component List (Qty./Set)			
End clamp	1	T Nut	1
Hexagon Bolt(M8*30)	1	SUS 304 Washer	1

إشراق للطاقة الشمسية
ESHRAQ SOLAR

Back Diagonal Brace

Product Name	Back Diagonal Brace
Dimensions	W40xH40mm
Weight	0.63 KG/m
Material	AL6005-T5
Surface Finish	Anodized(10/15 micron)
Standard	AS/NZS 1170.2/CE/UL

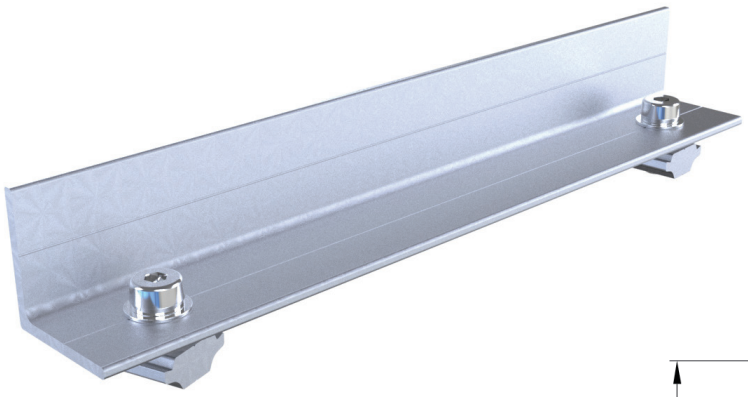

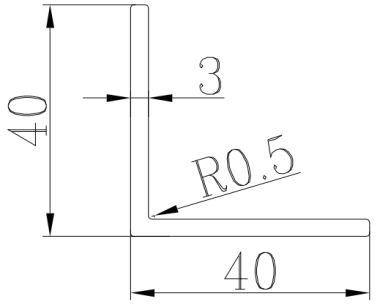

إشراق للطاقة الشمسية
ESHRAQ SOLAR

Mid Clamp

Product Name	30mm Mid Clamp
Item Number	GM-STXM-MC-30-D
Application	For PV module of 30mm thickness（with Eshraq Rail）
Dimensions	L 40 xW 15 mm
Weight	0.104 kg/pc
Material	AL6005-T5 ,Bolt: SUS316
Colar	Silver
Surface Finish	Anodized (no less than 10 um, excluding machined surfaces) Screw:SUS304
Standard	AS/NZS 1170.2/CE/UL



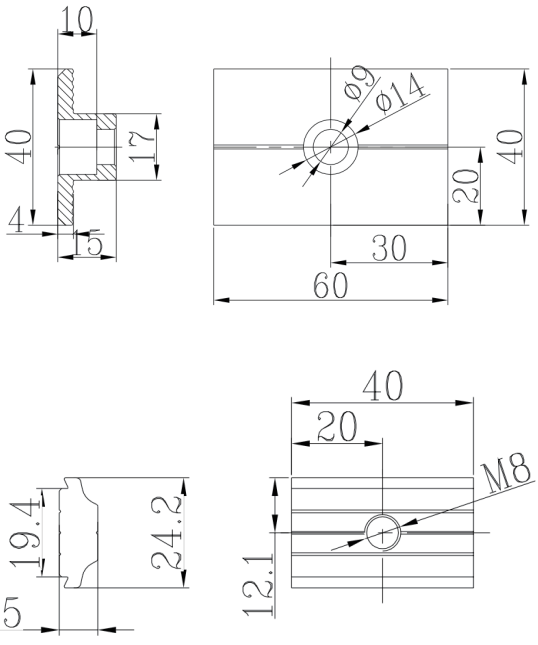

Component List (Qty./Set)			
Mid clamp	1	T Nut	1
Hexagon Bolt(M8*40)	1	SUS 316 Washer	1

إشراق للطاقة الشمسية
ESHRAQ SOLAR

Back Diagonal Brace

Product Name	Main Beam
Dimensions	W90xH50mm
Weight	1.046 KG/m
Material	AL6005-T5
Surface Finish	Anodized(10/15 micron)
Standard	AS/NZS 1170.2/CE/UL

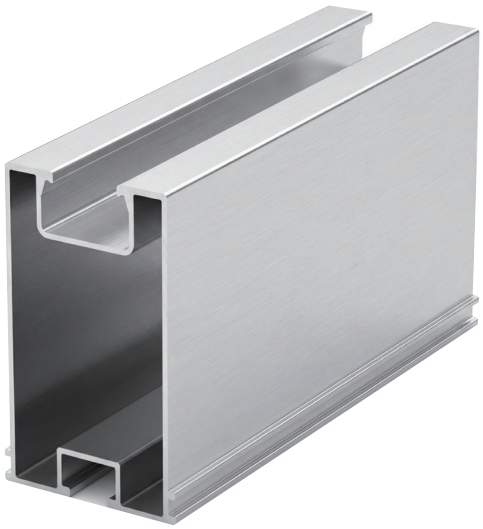

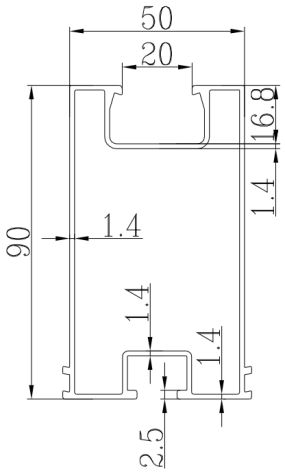

إشراق للطاقة الشمسية
ESHRAQ SOLAR

Rail

Product Name	Rail
Dimensions	W60xH82.5mm
Weight	1.226 KG/m
Material	AL6005-T5
Surface Finish	Anodized(10/15 micron)
Standard	AS/NZS 1170.2/CE/UL

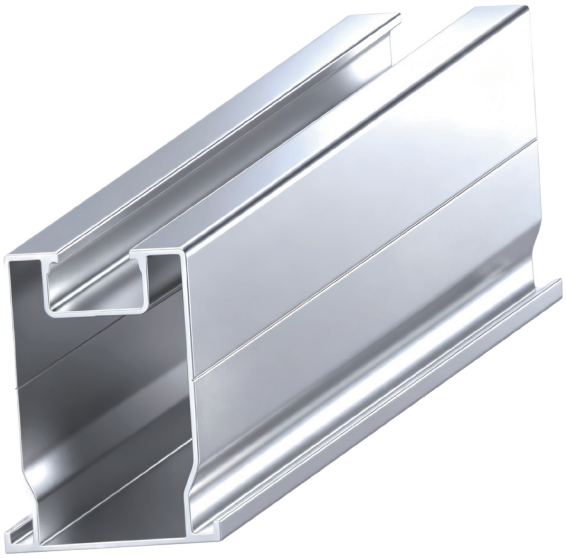

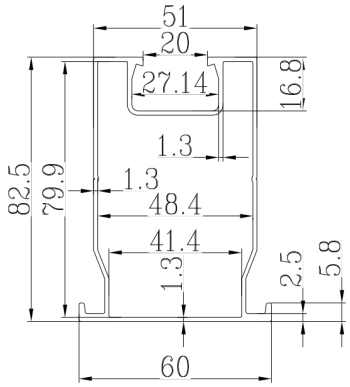

Rail Splice

Product Name	Rail Clamp
Application	Connect Eshraq rails for longer PV array
Dimensions	L 47.2 xW 79.3 mm
Weight	0.506 kg/pc
Material	AL6005-T5 ,Bolt: SUS304
Surface Finish	Anodized (10/15micron)
Standard	AS/NZS 1170.2/CE/UL

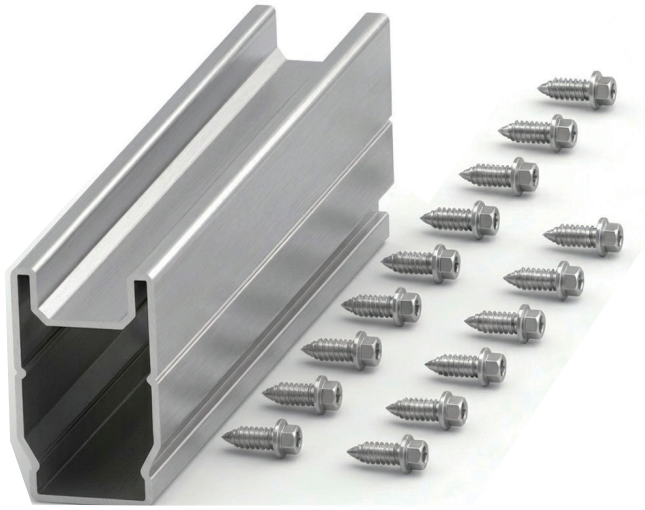

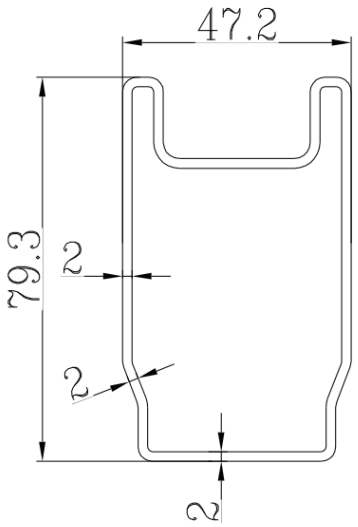

Component List (Qty./Set)			
300mm Joiner	1	Salf tapping screw	12