إشراق للطاقة الشمسية
ESHRAQ SOLAR

Rail

Product Name	Rail
Item Number	GM-STXM-R01
Dimensions	W31xH50mm
Weight	0.6 KG/m
Material	AL6005-T5
Surface Finish	Anodized （Anodized (no less than 10 um, excluding machined surfaces)
Standard	AS/NZS 1170.2/CE/UL

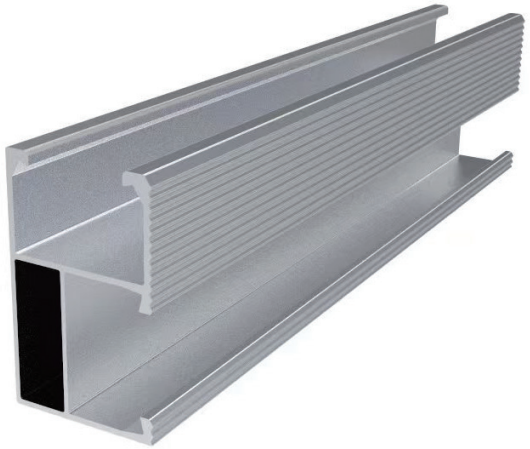

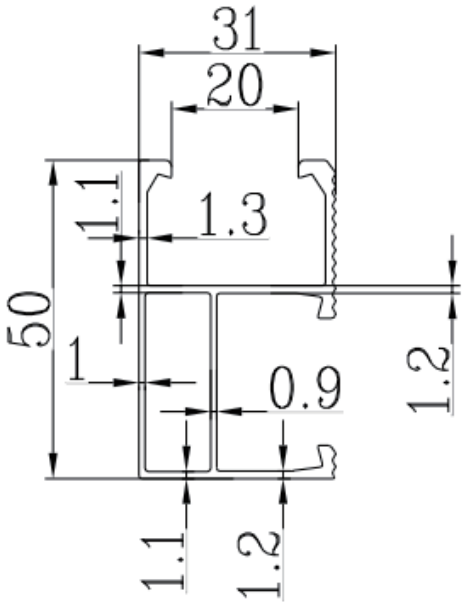

Rail Joiner(optional)

Product Name	Earthing Rail Joiner
Item Number	GM-STXM-RS-01-L-D
Application	Connect Eshraq's rails for longer PV array
Dimensions	L 150 xW 30 mm
Weight	0.144 kg/pc
Material	AL6005-T5 ,Bolt: SUS304
Surface Finish	Anodized (Anodized (no less than 10 um, excluding machined surfaces) Bolt:SUS304
Standard	AS/NZS 1170.2/CE/UL

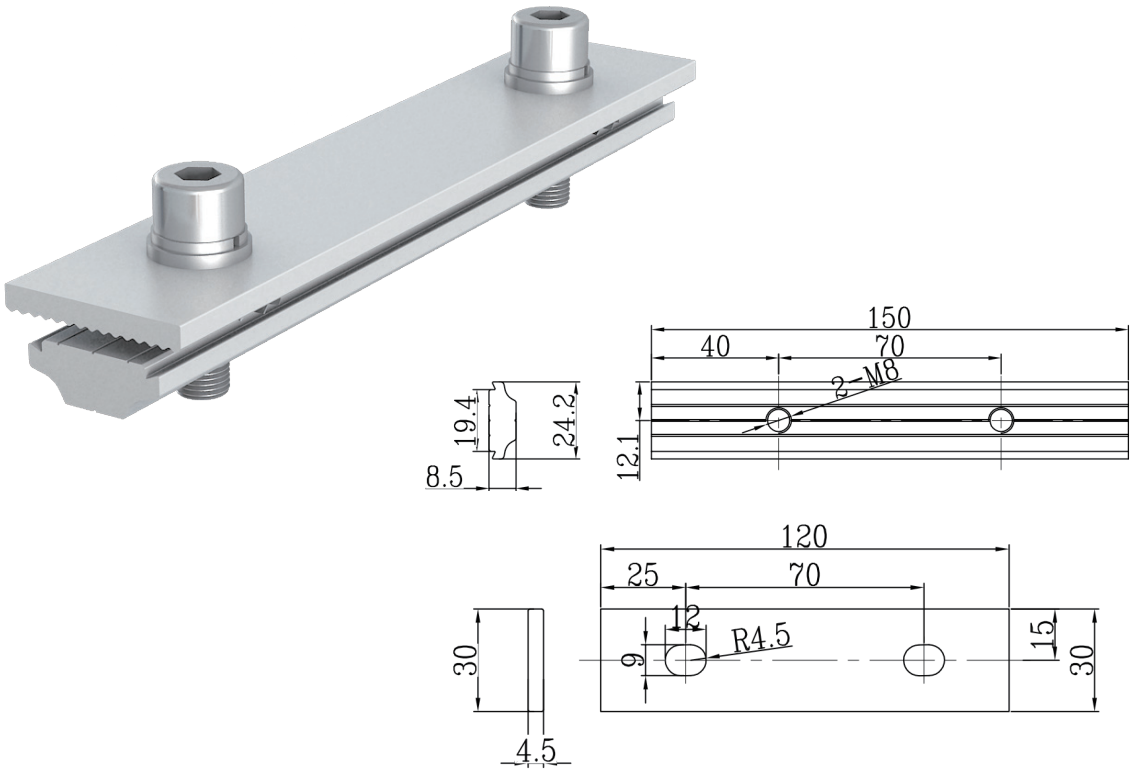

Component List (Qty./Set)			
Joiner	1	T Nut	1
Hexagon Bolt(M8*20)	2	SUS316 Washer Set	2

Tin Feet

Product Name	L Feet
Item Number	GM-STXM-MRH-L-D
Application	Metal Roof
Dimensions	L 40 xW 85 mm
Weight	0.1447 kg/pc
Material	AL6005-T5 Screw:SUS410 Rubber washer:EPDM
Colar	Silver
Surface Finish	Anodized (Anodized (no less than 10 um, excluding machined surfaces) ,class-3 for screws
Standard	AS/NZS 1170.2/CE/UL



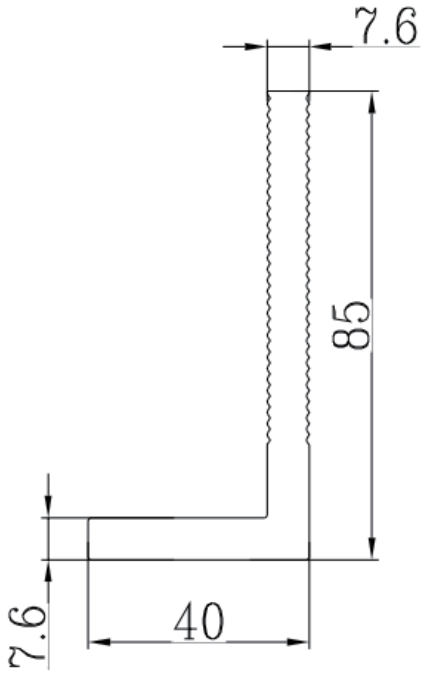

Component List (Qty./Set)			
L Feet	1	T Nut	1
Hexagon Bolt(M8*25)	1	Rubber Washer	1
ST5.x175 screw-Class5	1		

إشراق للطاقة الشمسية
ESHRAQ SOLAR

Mid Clamp

Product Name	30mm Mid Clamp
Item Number	GM-STXM-MC-30-D
Application	For PV module of 30mm thickness（with Eshraq Rail）
Dimensions	L 40 xW 15 mm
Weight	0.104 kg/pc
Material	AL6005-T5 ,Bolt： SUS304
Colar	Silver
Surface Finish	Anodized （Anodized (no less than 10 um, excluding machined surfaces) Screw:SUS304
Standard	AS/NZS 1170.2/CE/UL



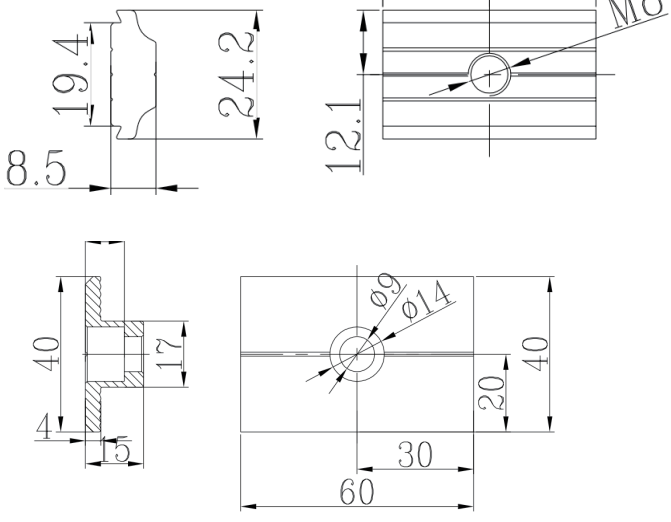

Component List (Qty./Set)			
Mid Clamp	1	T Nut	1
Hexagon Bolt(M8*40)	1	SUS 316 Washer	1

إشراق للطاقة الشمسية
ESHRAQ SOLAR

End Clamp

Product Name	30mm End Clamp
Product Code	GM-STXM-EC-30-D
Application	For PV module of 30mm thickness
Dimensions	L 47 xW 33.5 mm
Weight	0.083 kg/pc
Colar	Main Structure: AL6005-T5 Bolts: SUS 304
Material	Silver
Surface Finish	Anodized （Anodized (no less than 10 um, excluding machined surfaces)
Standard	AS/NZS 1170.2/CE/UL

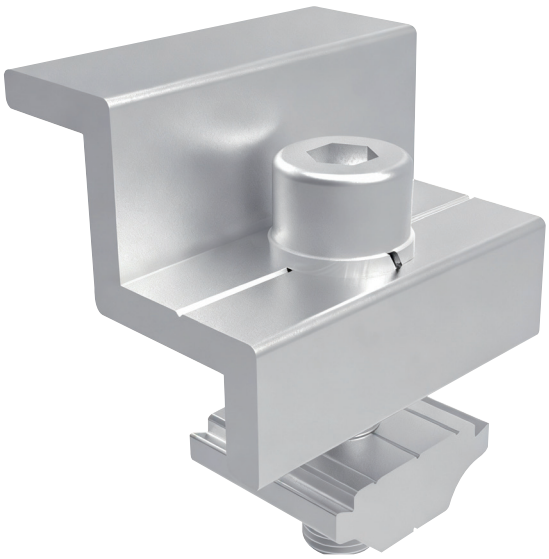

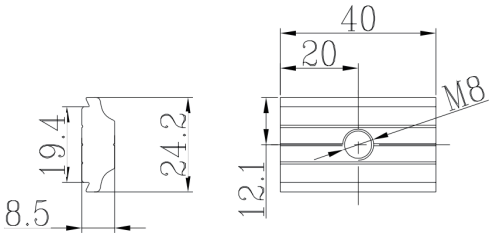

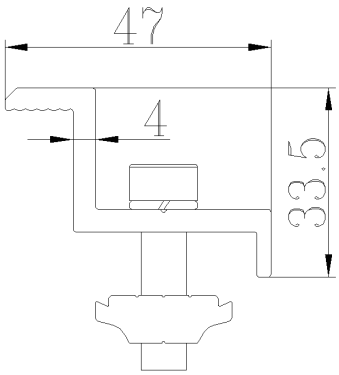

Component List (Qty./Set)			
End Clamp	1	T Nut	1
Hexagon Bolt(M8*30)	1	SUS 304 Washer	1

Grounding Lug(optional)

Product Name	Grounding Lug
Application	Grounding Lug for Eshraq's PV Mounting Systems
Item Number	GM-STXM-EK-D
Dimensions	L 44 xW 20 mm
Weight	0.046 kg/pc
Material	AL6005-T5 ,Bolt: SUS304
Colar	Silver
Surface Finish	Anodized (Anodized (no less than 10 um, excluding machined surfaces)
Standard	AS/NZS 1170.2/CE/UL

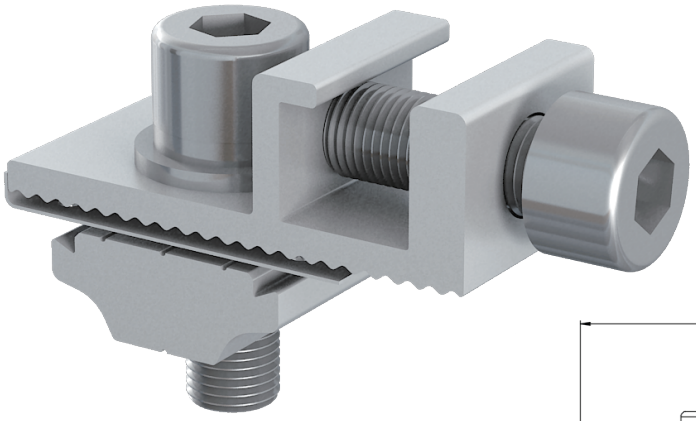

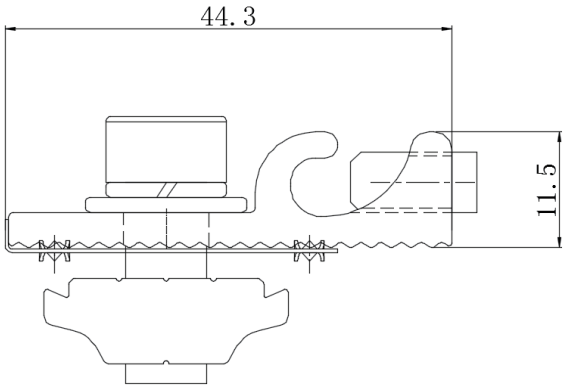

Component List (Qty./Set)			
Grounging Lug	1	T Nut	1
Hexagon Bolt(M8*20)	1	Pointed End Set Screw	1
SUS 316 Washer	1	Earthing Washer	1

Earthing Clip (optional)

Application	Earthing Washers for Preassembled Kits
Dimensions	L 32.7 xW 34mm
Weight	0.002 kg/pc
Material	SUS304
Packaging	100pcs/bag, 5000pcs/carton, 500x300x210mm
Standard	AS/NZS 1170.2/CE/UL

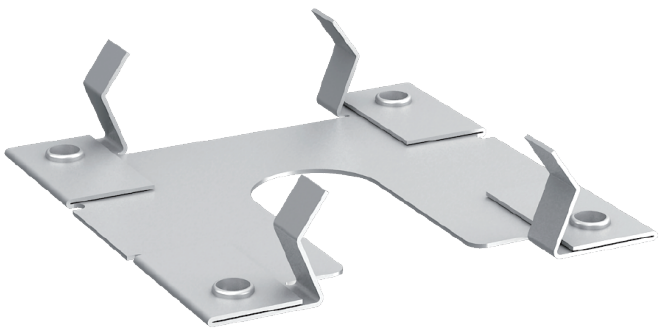

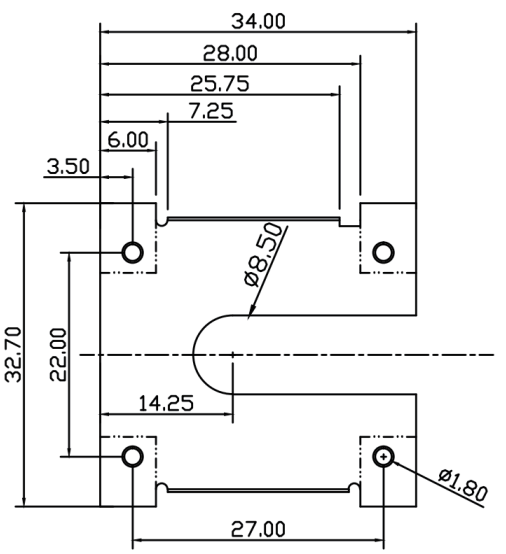

Component List (Qty./Set)	
Earthing Washer	1